www.shawneehillsworkshop.com

Off-Road Overland Camper

Thank you for purchasing these plans from Shawnee Hills Workshop! Please feel free to build this camper for you own use. No commercial production of this camper and/or sharing of these plans or other use are permitted without the express written permission from Shawnee Hills Workshop.

Before you read through the plans for the first time, I want to make sure you understand what the plans are and what they are not. The plans will give you the layout of the camper and a direction and order to go about building the camper. They will take some of the thinking out of the process. What they will not do is teach you a craft of any kind or terminology. There are a lot of crafts that are required to build this camper, it is a huge undertaking and you need to make sure you are up to the challenge. For instance, you have to know how to sew and be able to make patterns in order to make the canvas "pop-up". These instructions don't teach you how to sew or how to make the patterns. These plans are also not an exact cut list. Once the basic shell is complete, it would be impossible for me to give a cut list. Every one that is built will be slightly different, all I can do is guide you based on your measurements. These plans are also not structural plans for a DOT approved trailer. See page 36 for more info regarding this

I did not build my camper from these plans. I built my camper and then made plans for it. Because of that, there has never been a camper built from these plans. If you find an error or if something does not make sense. Feel free to email me @ shawneehillsfarm@gmail.com or send a facebook message https://www.facebook.com/Shawneehillswoodworking/ .

A lot of things with regard to this build involve life safety. **I will not give direction in any of these situations**. If you are not 100% confident in your ability with these things DO NOT ATTEMPT THEM! Hire a professional.

Lastly, these are not ENGINEERED drawings. This is simply how I built mine. You take on all the responsibility to determine the safety and stability of your build.

Thank You,

Shawnee Hills Workshop

Materials List

*This material list does not include commodity material such as glue, solder, wire connectors, standard wood screws, nuts and bolts. It is assumed that if you are taking on a project of this magnitude you have the ability to decide on these things yourself and you probably already have an assortment of them.

*As was stated earlier, a camper has not been built from these plans. If you find inaccuracies or something you believe has been left of, please email me

*the Steel for the trailer frame has been left off of this list. See page 31

Recommended Tools

Obviously there are more tools you will need than just these, but these are ones you may not have that will make the job a lot easier!

Track Saw – https://amzn.to/2KxSRno

Or Track Saw Guide - https://amzn.to/2KzfSGA

Plate Jointer- https://amzn.to/2PWpReV

Snap Setter – https://amzn.to/2TMgtJj

Conduit Bender- https://amzn.to/2TN0ZVt

These Plans are a guide that accompanies the build videos. Please watch the videos before you begin as it will make the build go much smoother. You can find the playlist for the entire Off-road Overland Camping trailer Here

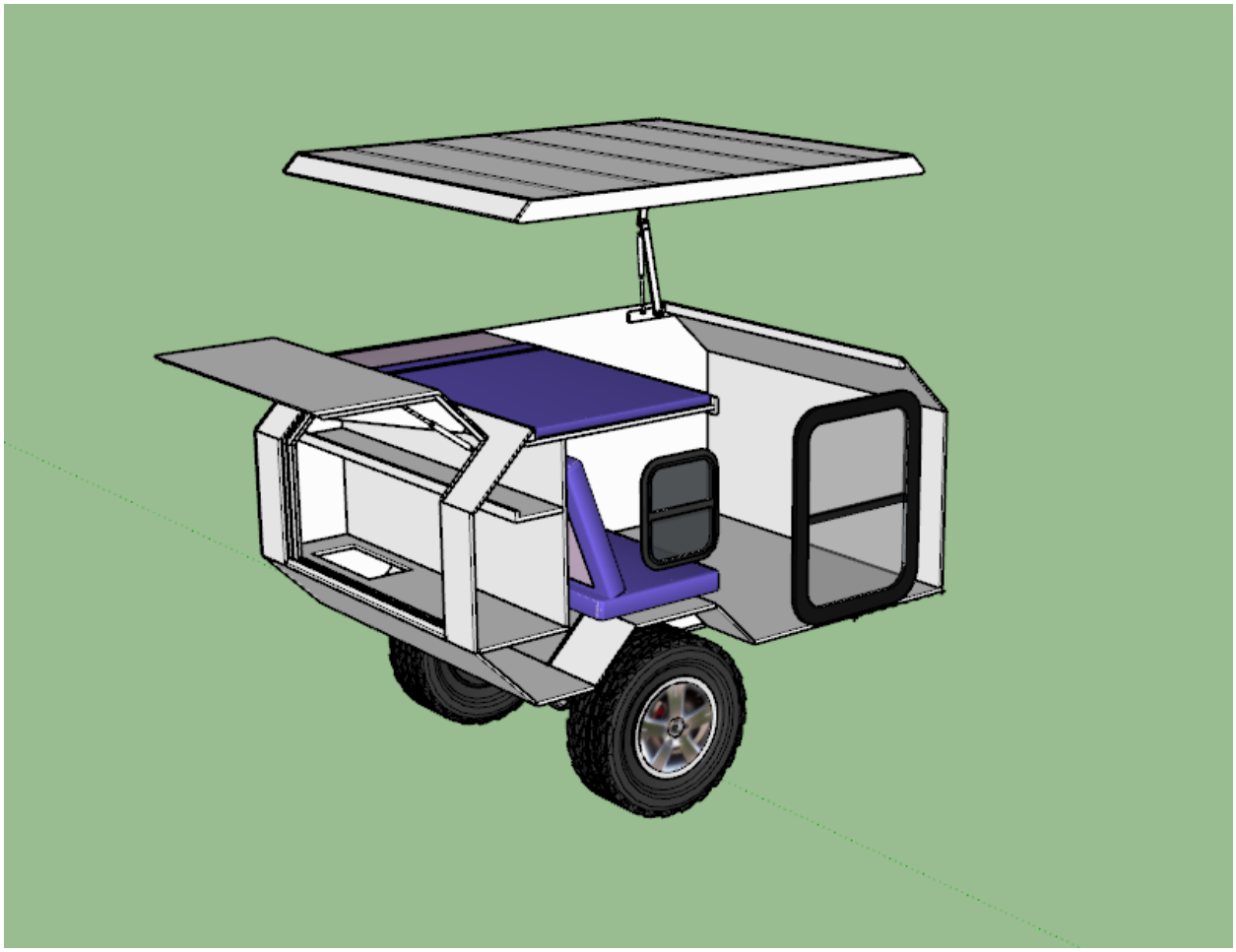

Building the Camper Body

The first pieces that should be cut are Sides (save the fender cut outs), Side extenders, Front and Rear panels along with the interior bulk heads. Once these pieces are cut and set aside, the next pieces to be cut are the bottom panels. A track saw makes easy work of this, but you can use a regular circular saw or even a jig saw. See page 7 for labels and dimensions.

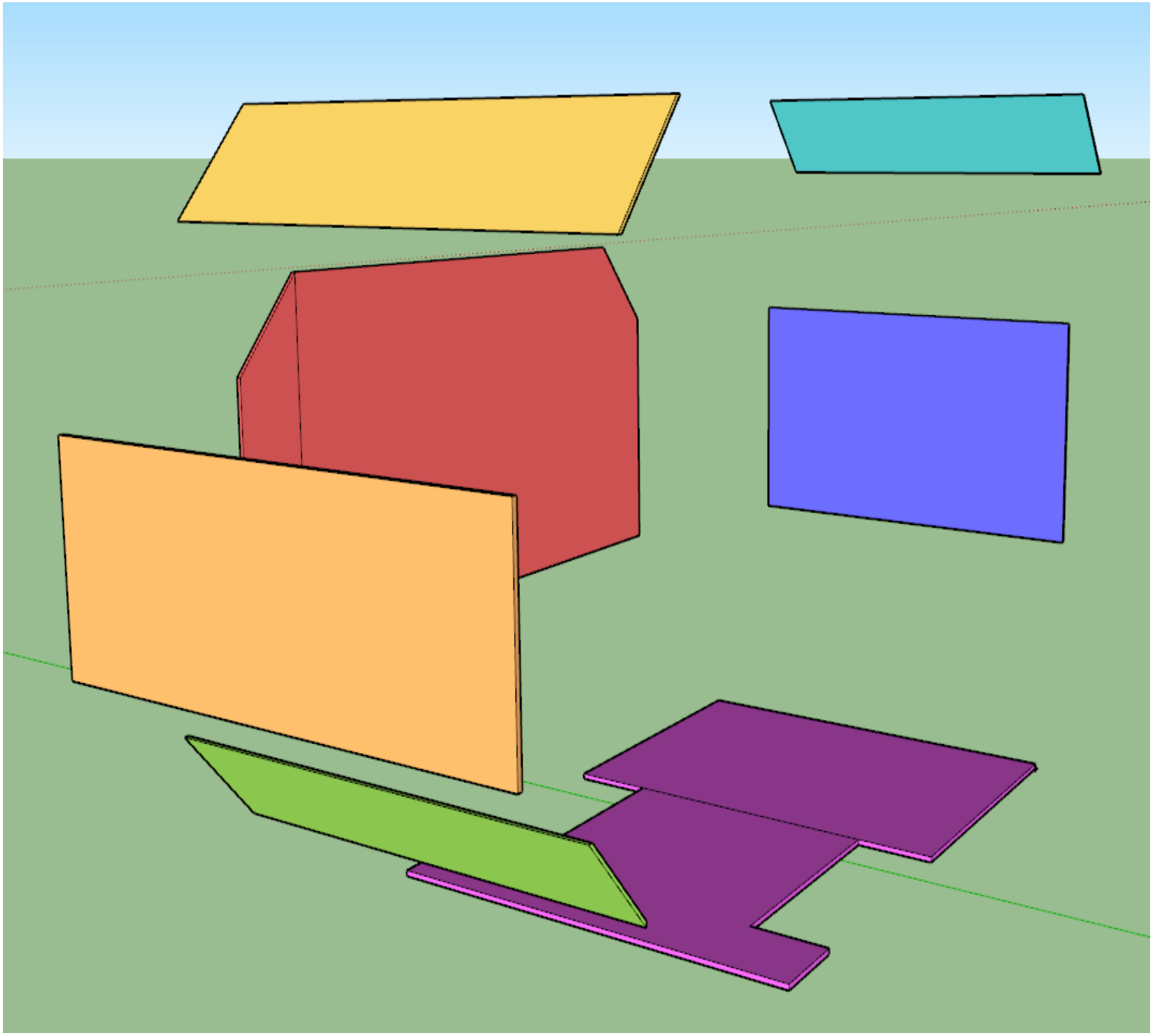

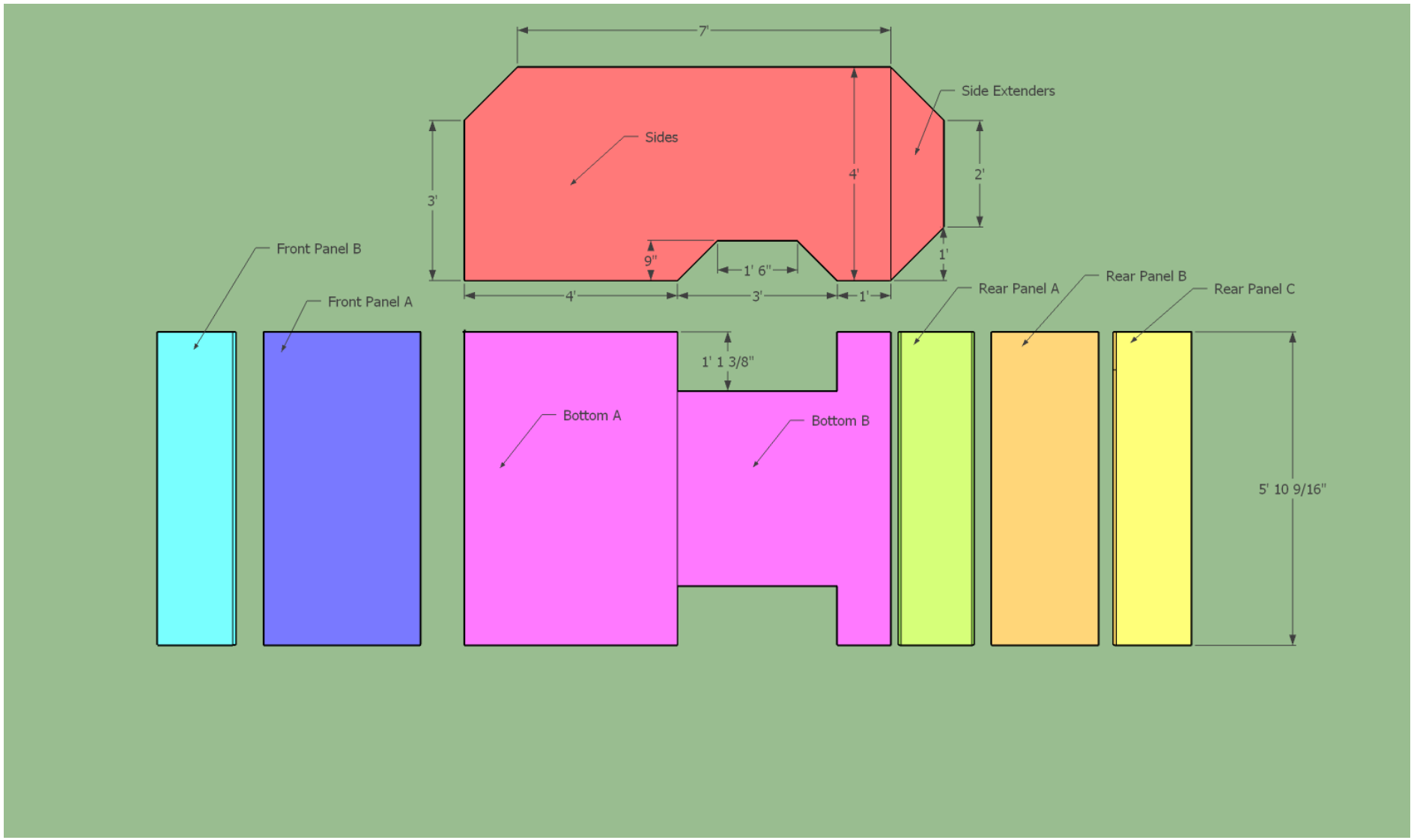
7'
Side Extenders
Sides
4'
2'
3'
9"
1' 6"
1'
4'
3'
1'
Front Panel B
Front Panel A
Rear Panel A
Rear Panel B
Rear Panel C
1' 1 3/8"
Bottom A
Bottom B
5' 10 9/16"

At this point you can begin assembling the body of the Camper. You can either assemble the camper directly on the floor or on an elevated surface so long as it is planar and large enough.

Start by joining the two floor panels (Bottom A & B) together with a temporary scrap piece of plywood so they stay in place while finishing the assembly. This piece will be replaced with a permanent piece on the bottom, but this piece cannot be added until when you are fiberglassing the body.

Next, attach one side to the bottom by predrilling with a countersink bit and securing with 2” exterior grade wood screws and glue. For this process it is best to have a helper to hold the side vertical until the front panel is attached however temporary bracing can be used as shown on page 13. Attach the front panel A and opposite side panel in the same manner.

Using the fender cutouts, install them on top of the floor. For the fender wells, measure your specific space and add the three top pieces being careful to make sure to leave a reveal between the side panels and the fender well. It should be around ½ of an inch.

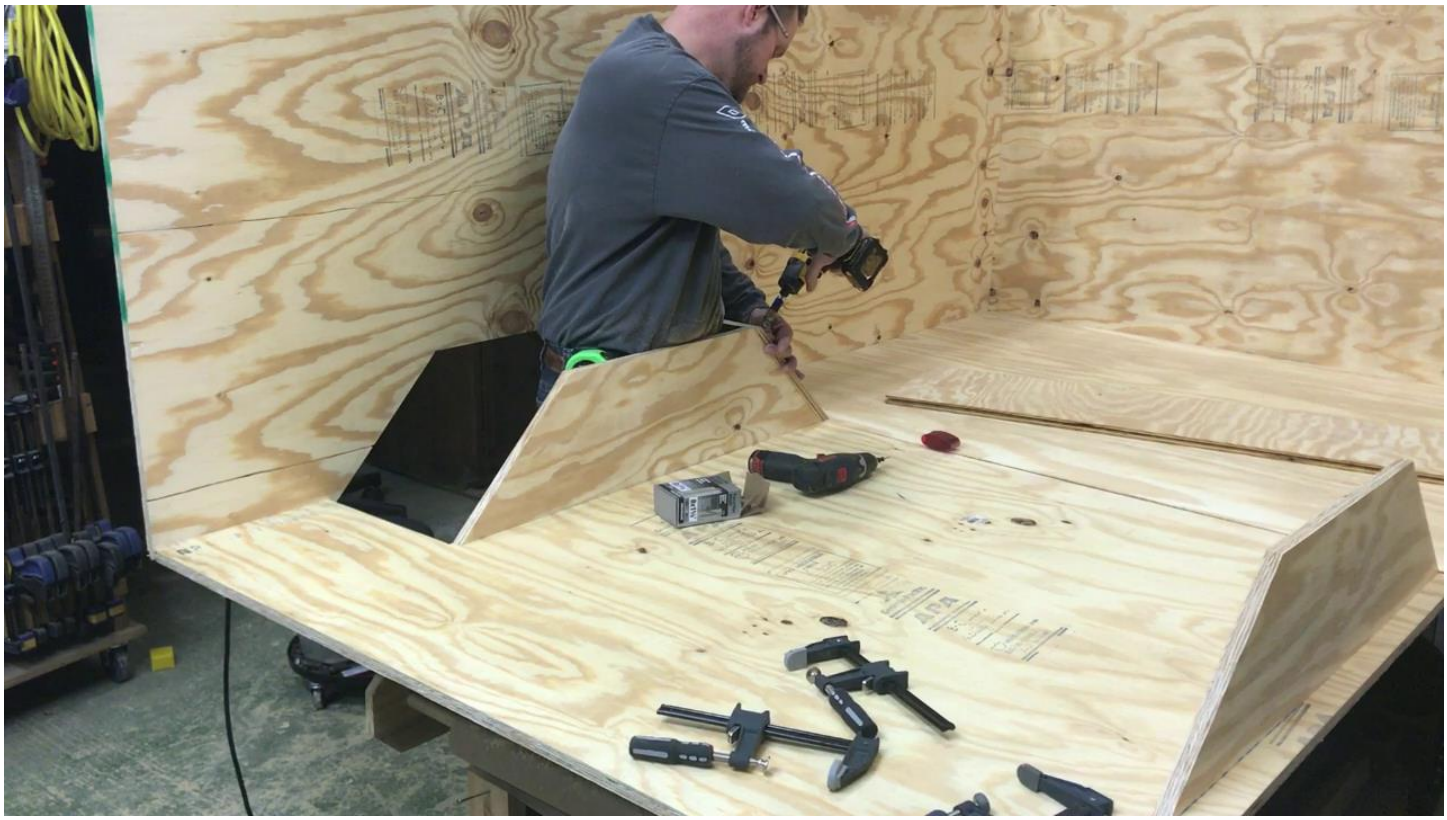

At this point you are ready to attach the interior bulkheads. The use of temporary supports may be necessary to get these placed correctly. The Bulkheads are not just a divider between the galley and the interior, they are vital to the structure. They support the side panels as well as the side panel extenders. Use Glue and Screws to attach the bulkheads just as before. Be sure to screw them together as well as to the sides.

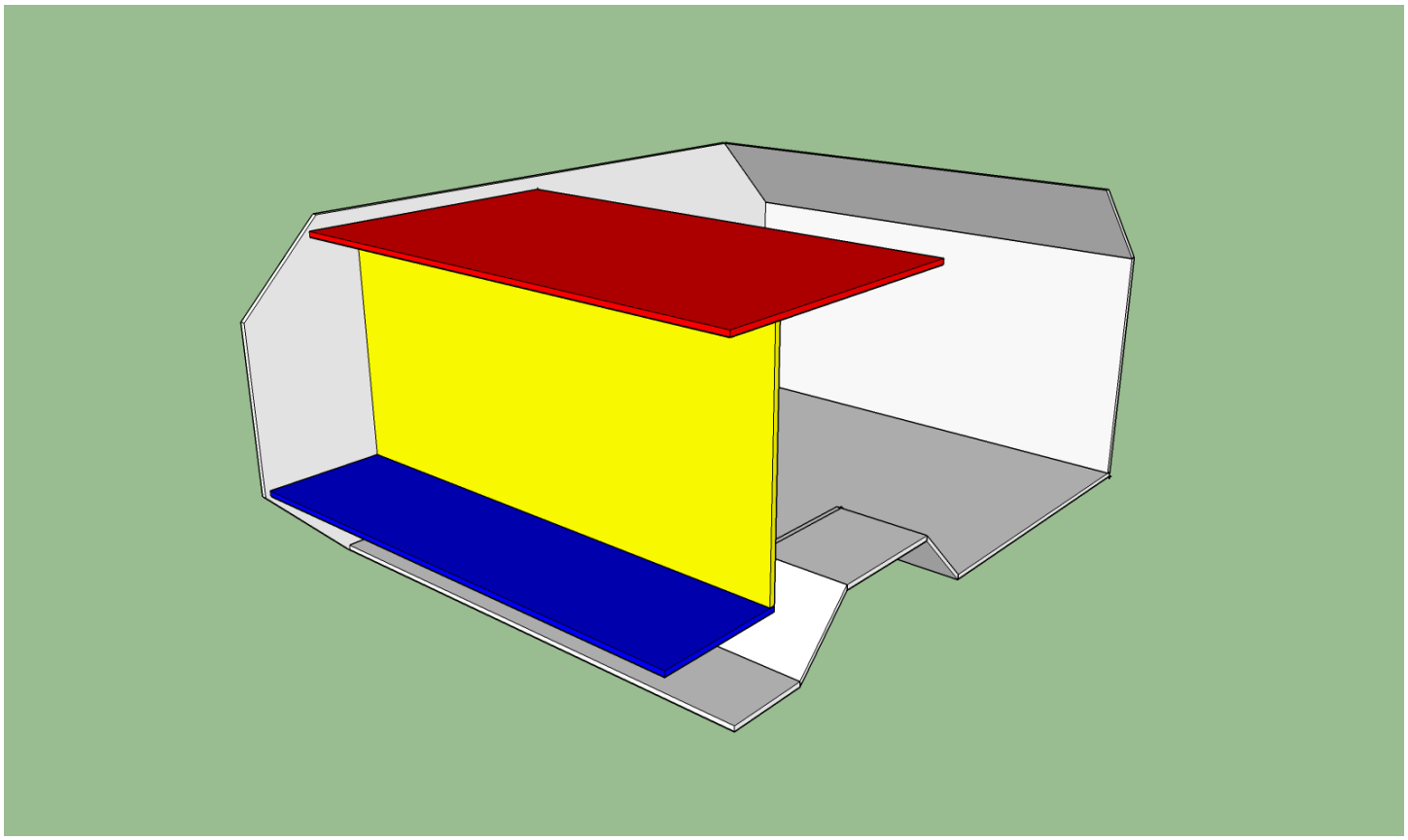

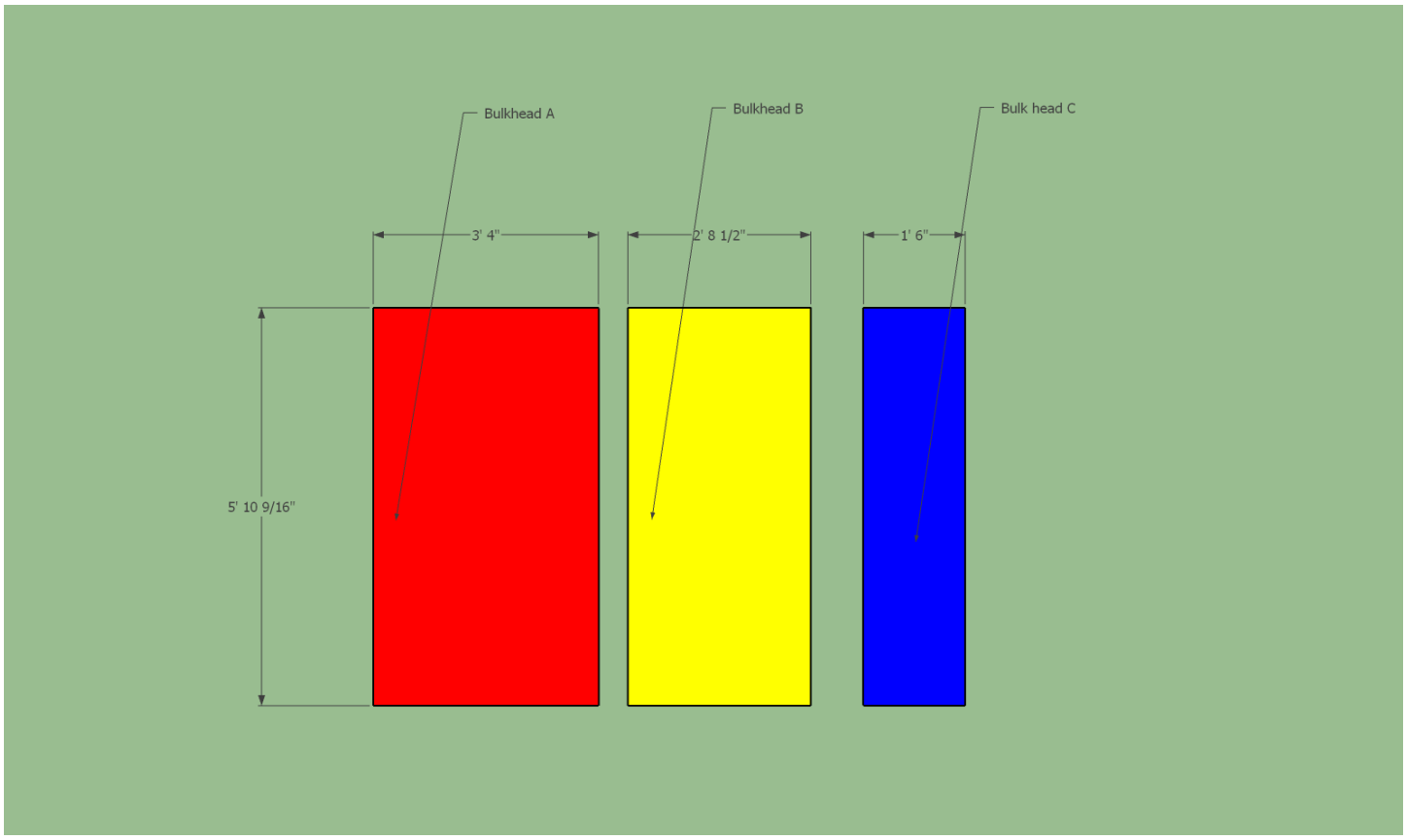
Bulkhead A
Bulkhead B
Bulk head C
3' 4"
2' 8 1/2"
1' 6"
5' 10 9/16"

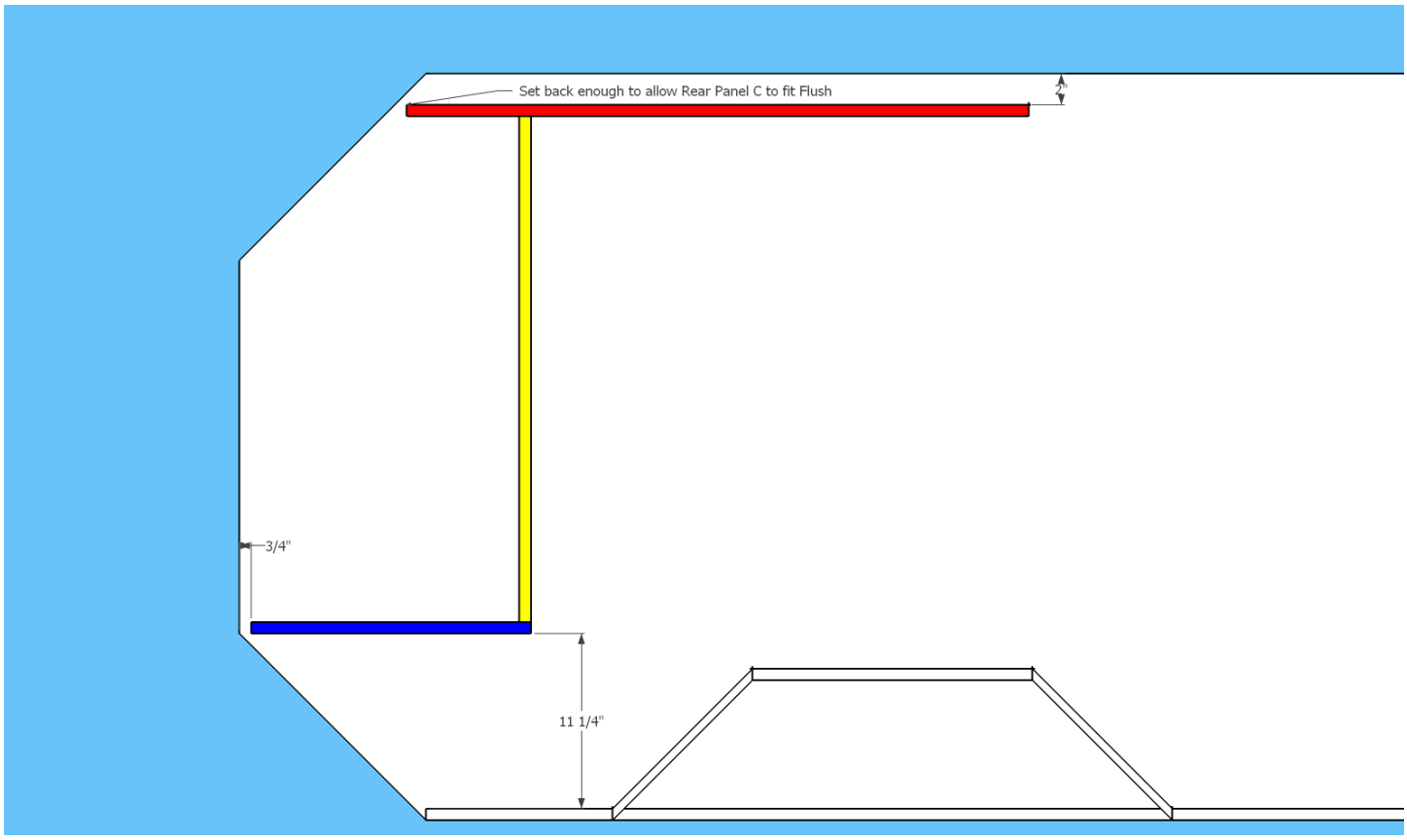
Set back enough to allow Rear Panel C to fit Flush
2"
3/4"
11 1/4"

Before Cutting and installing these Bulkheads you will need to verify the depth of your stove, or any other appliance you plan to put in your galley, if you need to make your counter deeper, now is the time.

The side panel extenders are attached to the side panels using splines. I use a plate jointer (biscuit jointer) to cut the slot for the spline, but you could use a router or any other way you feel comfortable making the cut. An important thing to consider is the grain pattern of the spline. In an ideal situation the grain would be orthogonal (90 degrees) with respect to the joint, however, as long as the grain is close to 45 degrees across the joint it should be sufficient.

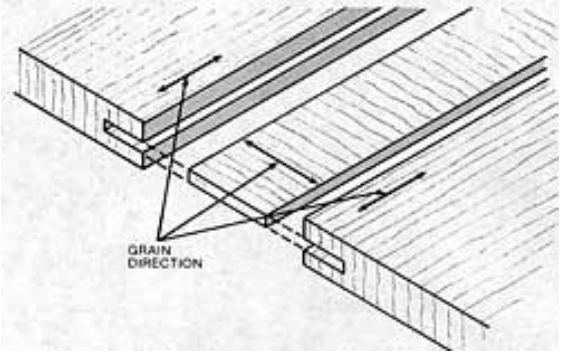

Glue the spline in and use screws in the bulkhead to hold it in place. Once the glue is dry trim the corners at the top and bottom.

Install the rear panels and front panel in the same manner as the front and sides. If you have not already installed front panel B, do that now also.

Using the templates from the windows and doors you have chosen, cut out all the window and door openings. I think it is important to note that I originally bought a slam latch cargo type door because I didn't want to spend the money on a teardrop specific door; however, I quickly realized that the slam latch door was horrible to live with and ended up purchasing a teardrop door. Don't make the same mistake I made, purchase the correct door the first time.

Next it is time to cut out the door for the Galley. The sides and top can be cut with the blade of your saw set to 90°, however, the bottom cut must be made with the blade set to 45° sloping up toward the interior of the trailer. This is very important and will be required for proper drainage when building the gutter system in future steps. I inset my door 9" from either side, 6" from the top and started the bottom cut flush with the top of the counter, angled up at 45°. This results in a small ledge on the inside.

Once the door is cut out it will need to have bracing installed to strengthen the angle in the door.

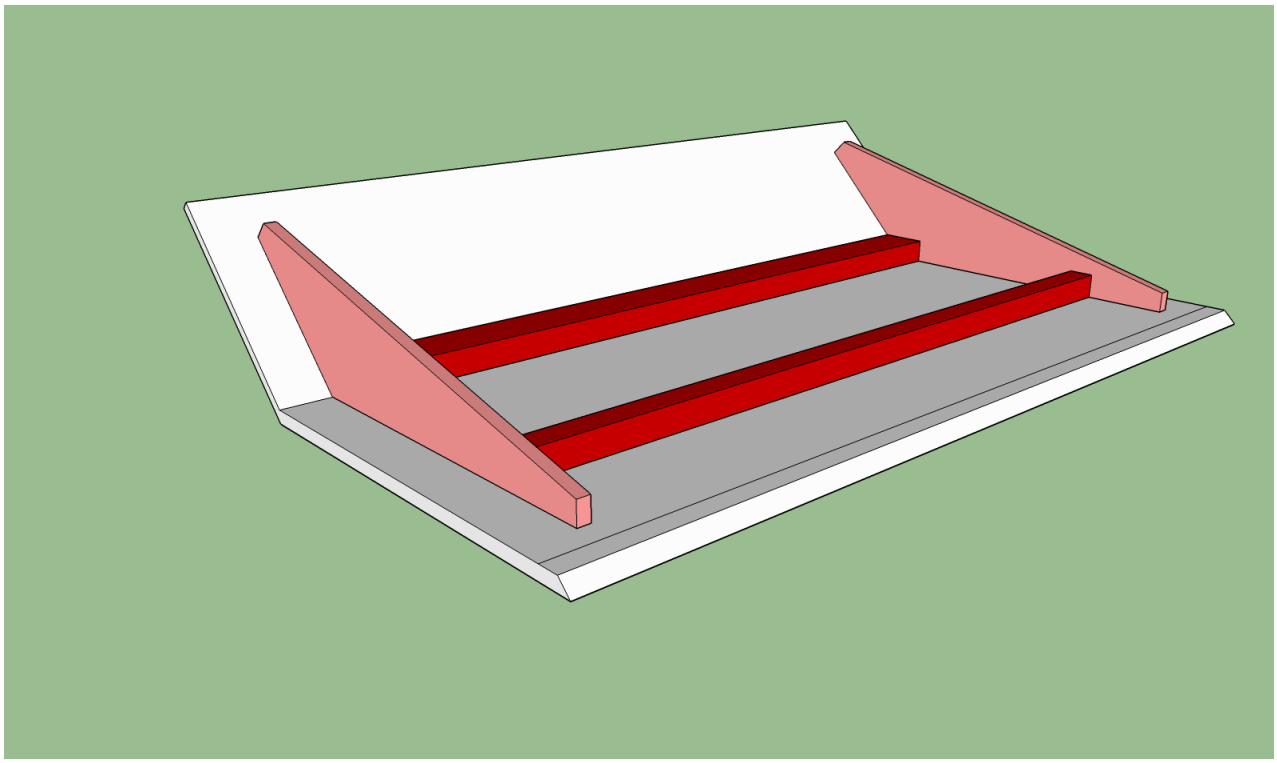

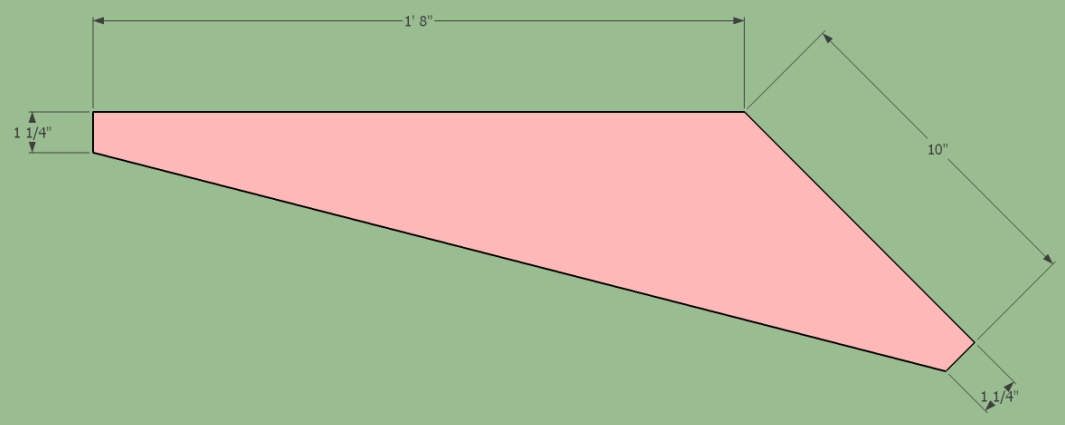
1' 8"
1 1/4"
10"
1 1/4"

5"
Cut to fit between braces. Each piece cut from 2x material. This piece has a 45° angle on one edge
1 13/16"
2 7/8"

Then you can install the hinge and replace the door. If you are not using the Hinge I linked in the material list, make sure you are using a hinge that is waterproof like pictured below. You may want to cut temporary supports to hold the door open so you can have access to the interior of the galley.

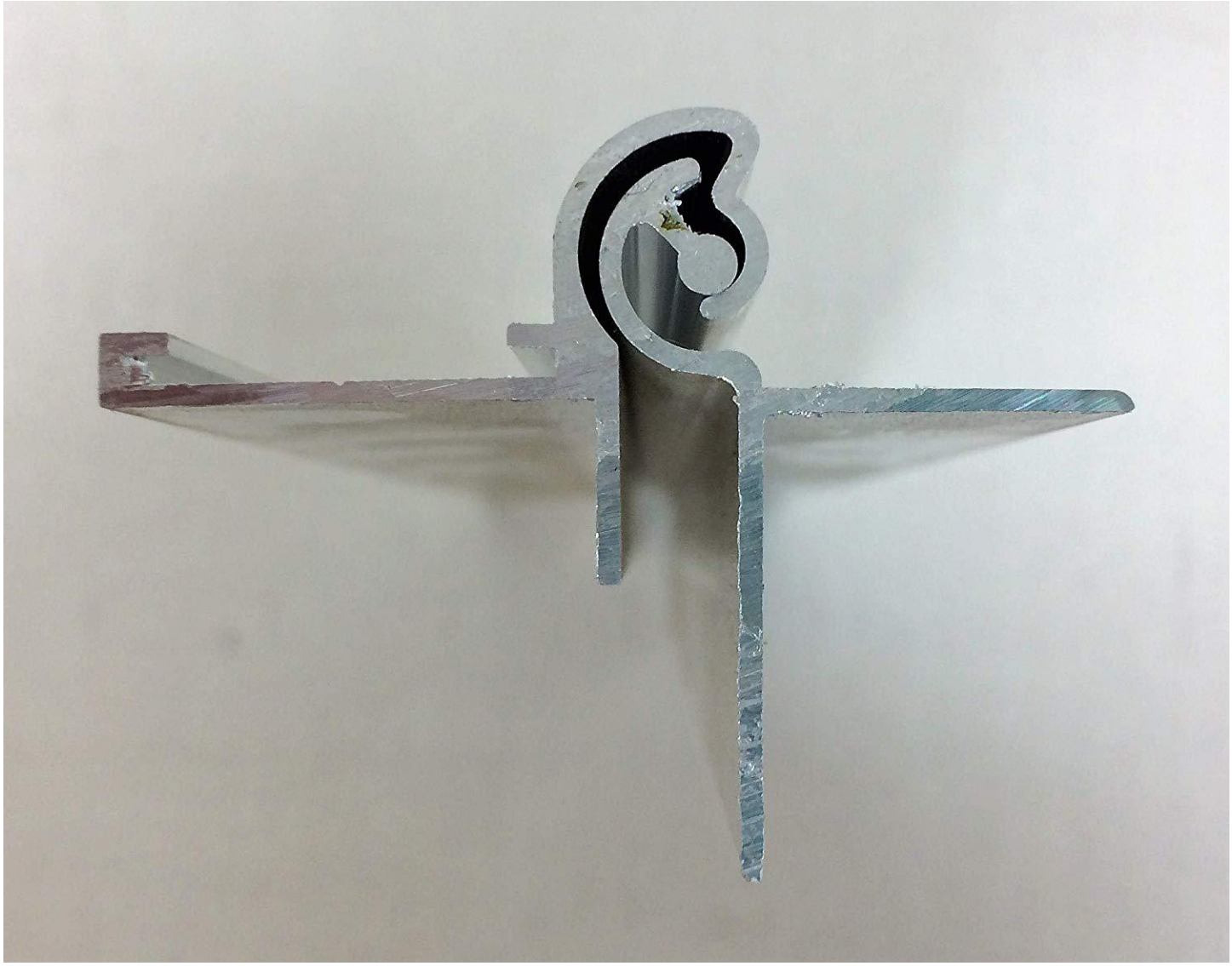

Now is also a good time to go ahead and cut the holes for the tail lights, Water fill spout and power entrance. I centered the lights from side to side and evenly spaced them from top to bottom. You can place them however is visually pleasing to you. Install the water fill and the power entrance below the counter on the driver side as most camp sites place the utilities on the driver side (assuming you ever plan on staying at a campsite!)

It is also a good time to do one of the most important steps of the entire build. As you may already know, screwing into end grain plywood isn't one of the strongest joints. Anywhere two plywood joints have come together they will need to be supported. DO NOT SKIP THIS STEP. Cut solid lumber into ¾" x ¾" sticks and glue them into all the interior corners. Also screw in both directions into the face grain of the plywood (see diagram).

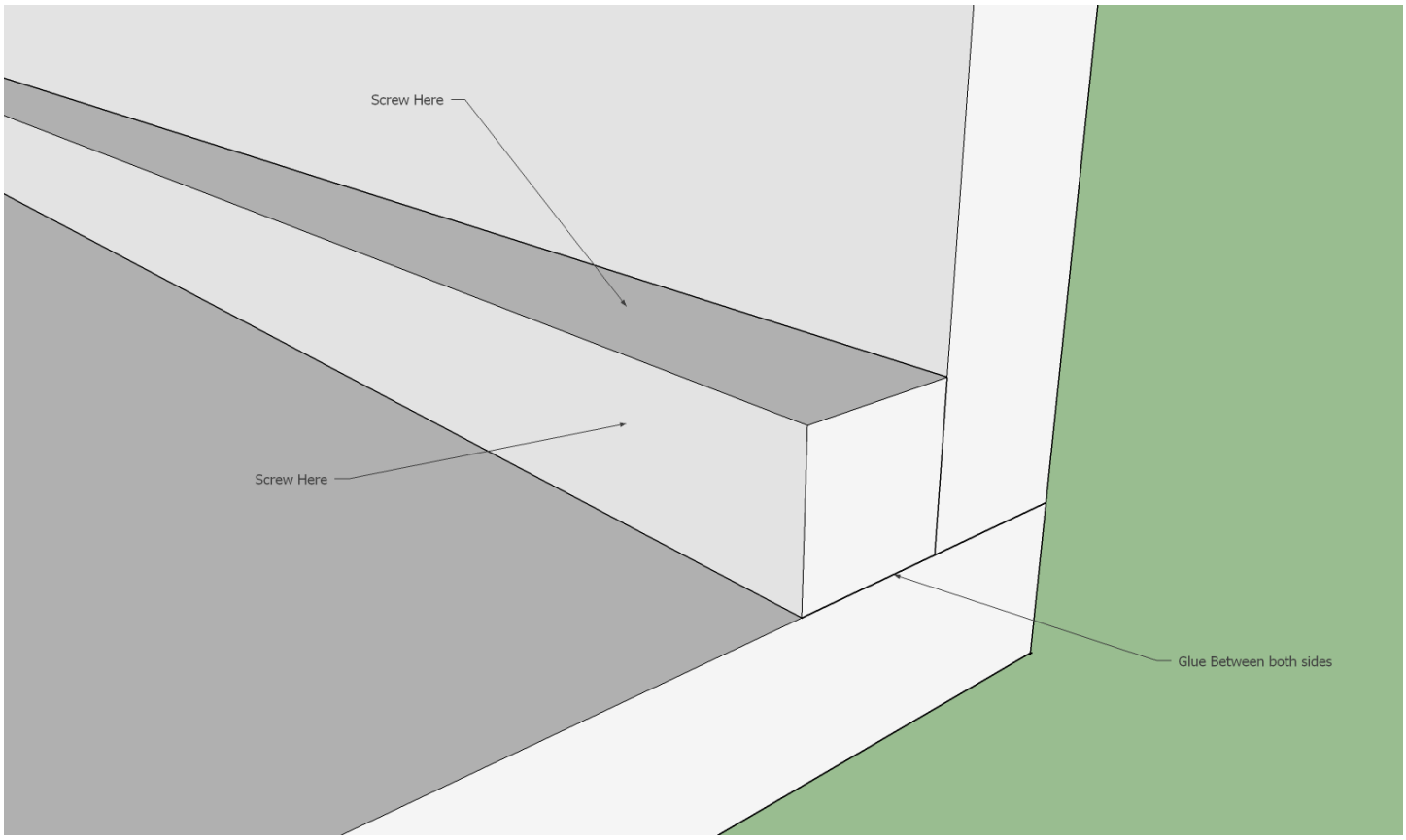

In the galley where the angled rear panel C meets bulkhead A, rip a 45° angle on the side of a 2x4 and fully support the bunk bed platform and hinge area of the galley door. You will also want to rip a piece of ¾” x 2” lumber to line the front of the bunk bed platform to strengthen it so it does not bow in the center.

To waterproof the galley door, we will be building a gutter system. This is accomplished by making a U-shaped gutter around the door and a protrusion on the door that rest inside the U. Start off by lining the two sides and bottom of the opening with ¾” x ¾” pine. Make sure to glue this on. Once the first layer is dry, add a second layer that is ¾” x 3” on either side allowing the extra 2 ¼” to protrude to the inside of the opening. On the bottom side, the second layer only needs to be 1” tall. To finish the gutter, glue on another ¾” x ¾” piece of pine flush with the interior edge of the two side pieces. You should now have a U shape gutter going down both sides of your opening. To finish it off, cut a small 45° piece to put in the center of the U right at the bottom.

For the door you will need to line each side with ¾” x ¾” pine keeping it flush with the edges making sure to cut a 45 degree angle at the bottom so it doesn’t hit the small 45 degree piece you put at the bottom of the U.

CONSTRUCTING THE TOP AND LIFT MECHANISM

By now any inconsistencies have compounded so if you are not all ready doing so, all measurements should be taken from your trailer

The Frame of the roof is built from clear 1x6 lumber. Build your frame so that there is a ½” gap all the way around between the frame and trailer. The top of the frame needs to rest 1-1/2” above the top of the trailer. Place 1-1/2” supports leaving enough room for your roof vent and the lift arms on either end of the roof. On the two supports closest to the ends sister on a horizontal 1x4’s for extra support.

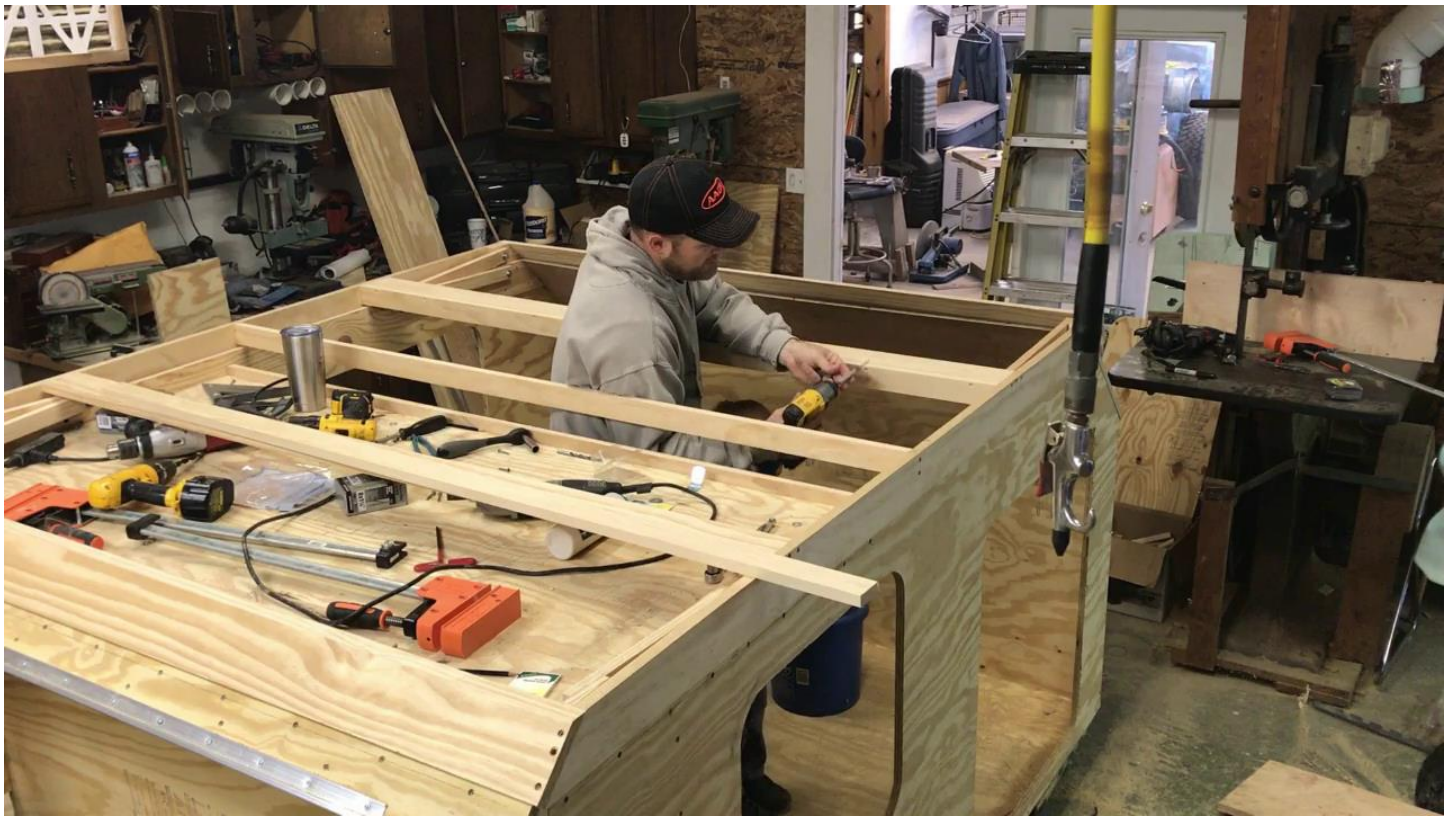

Add Blocking XXX to the roof frame and trailer sides as shown. These will serve as mounting points for the lift arm mechanism. A relief cut will be required on the bunk bed platform to allow for lift arm access. I suggest making it as smaller then you think is necessary and then making it larger as required to insure the smallest opening possible.

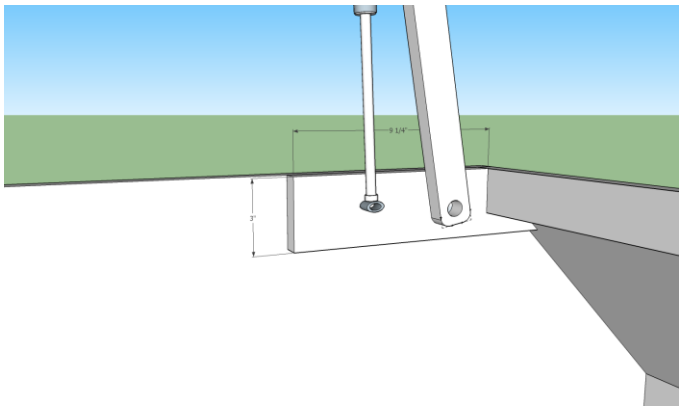

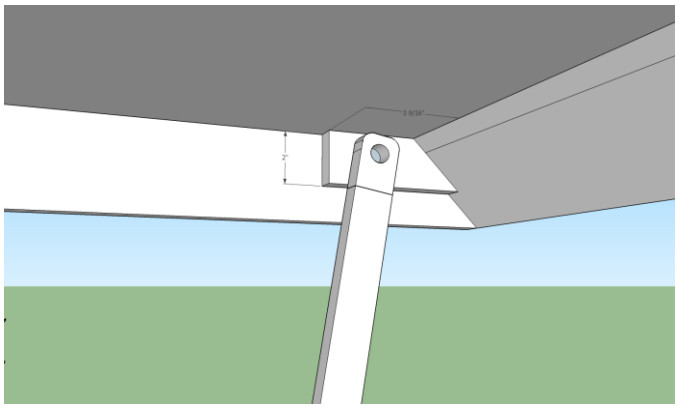

The lift arms will be made from plywood and aluminum flat bar laminated together.

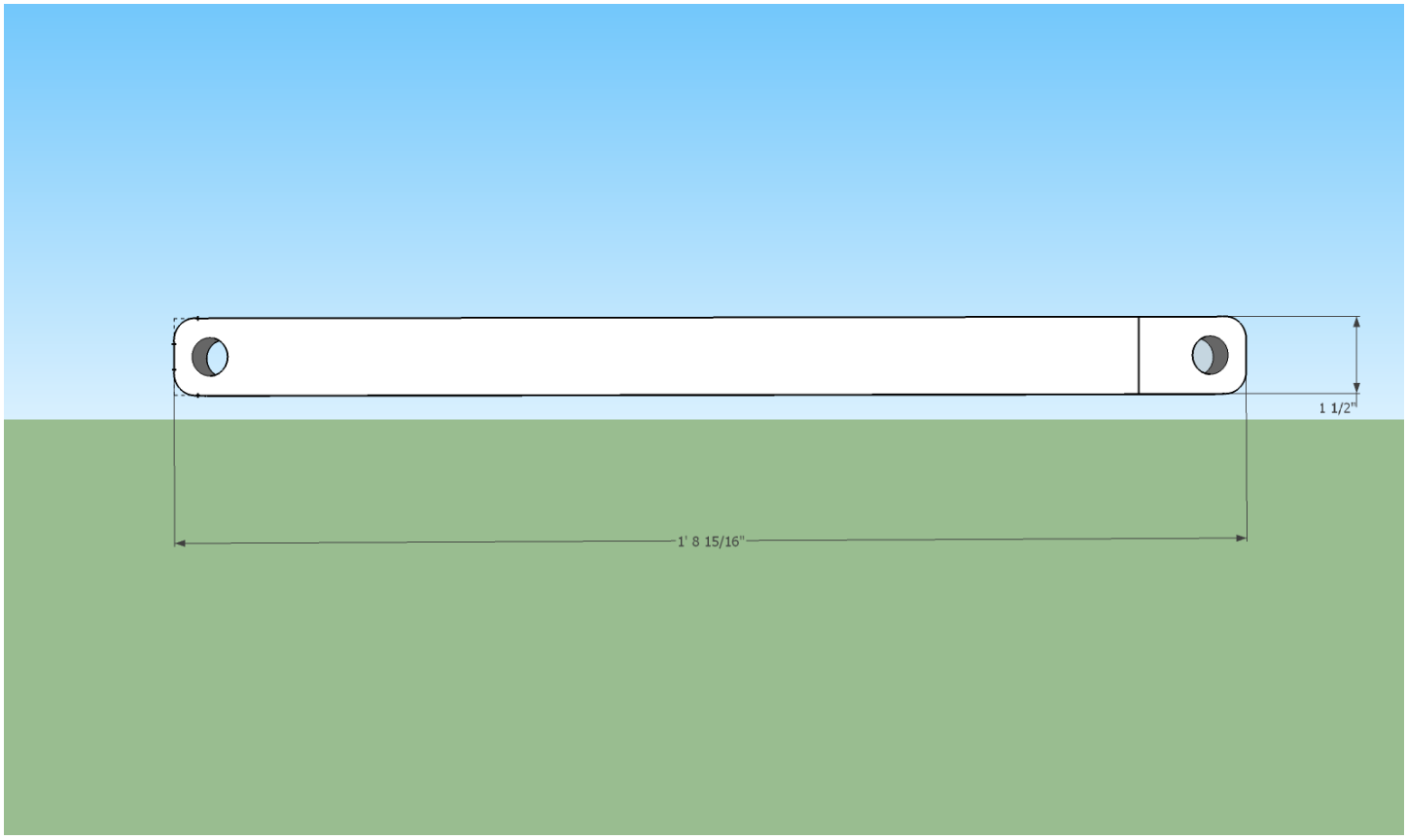

Plane the 1/8” off of the plywood and laminate 1/16” aluminum onto each side using contact cement. Drill a 5/16” holes centered on each end of the lift arms. Install a threaded insert into each of the brackets on the roof and the side. Now bolt two lift arms together and to the roof and camper in each corner. Make sure to install washers between each mating surface as well as the bolt head.

Install the struts per the manufacturer’s instructions and test for proper operation. You will also need to install limiting chains to keep the lift arms from over extending. The chain length needs to be so that the strut is just able to fully extend. Attach the chain to the bolts holding the lift arms to the roof and camper.

Once you are confident with your installation of the lift mechanism you can skin your roof with 3/8” plywood using glue and staples. This is a good time to cut the hole for you roof vent as well. Add 1 -1/2” pine as needed to frame out your opening.

Finishing the Exterior

Begin preparing the exterior surface by filling all the holes, crack and voids with BONDO. Take time to make sure everything is filled and remember that you have to sand off all of the excess so use enough to sufficiently fill all the holes, but just enough.

Once you have finished prepping all the surfaces, vacuum all the dust from the surface. Starting with the bottom wrap your fiberglass cloth over the bottom and

spread the epoxy across the cloth. Be very diligent to make sure there are NO bubbles and that the epoxy has completely saturated the cloth. This is EXTREMELY important as the fiberglass is what waterproofs and gives rigidity to the trailer.

After the bottom has dried, you will need to add the permanent support to the joint on the bottom. Screw the support directly in from the bottom. Once finished, BONDO the screw holes and fiberglass over the support in the same manner. After the bottom is finished move to the fender wells and sides making sure that each pieces overlaps the corner. In the fender wells add multiple layers of fiberglass cloth in all corners as this area will see more stress.

You will also need to fiberglass the top in the same manner as above, taking extra care while wrapping the fiberglass around the bottom of the frame.

After the epoxy has dried, trim the excess cloth from all openings. **NOW** is the time to look for any bubbles, gaps, etc. If you find any you will need to sand them off and patch them. You will also want to use BONDO to make any transitions seamless.

For extra protection to the bottom and top (the areas that will get the most abuse) I added several coats of Raptor Brand bed liner. I especially focused on the wheel wells.

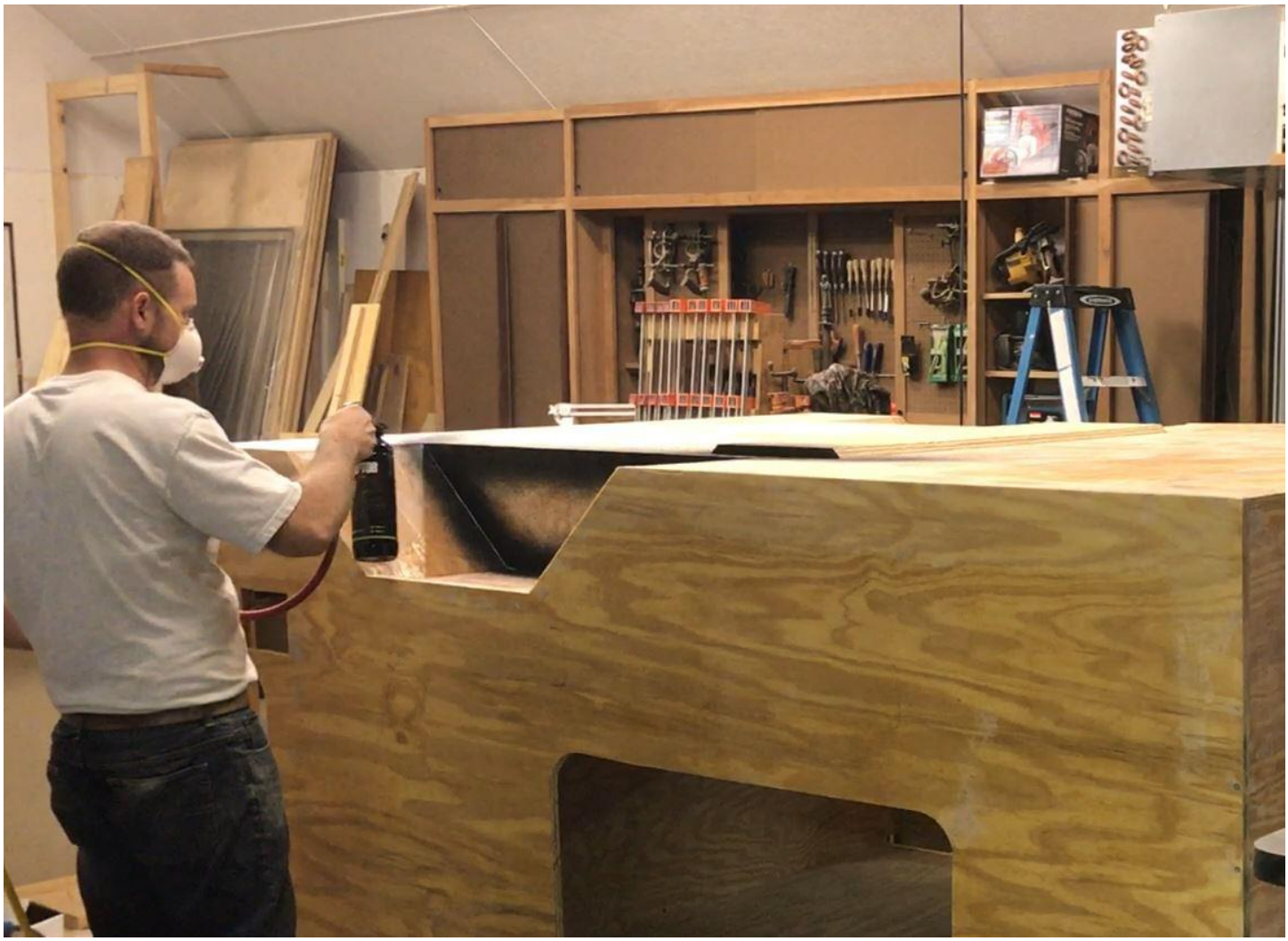

After the liner had dried, I primed and painted the sides using tractor paint. I chose this because it is oil base, it's made for the outdoors and came in a color I liked (Massey Ferguson Grey). Just for looks, I added bed liner to the sides about 18" up and on the entire front.

Building the Trailer Frame

***DISCLAIMER – If you plan on towing home built trailer, you are putting your life and others at risk. Do not attempt to do this unless you are 100% confident in your ability to fabricate and weld a trailer. I will not be showing you how to build the frame of the trailer. I will list out some things to take into account and it will be up to you do decide what is "strong enough" to uphold the level of abuse you intend to put it through. Wesley Harville D.B.A Shawnee Hills Workshop is not liable for the safety of your trailer. If you are not 100% confident, have a trailer built to your specifications or adjust the camper to fit a readily available trailer.**

I suggest not building the trailer until the body of the camper is finished so you can match the trailer to the camper. I chose to add brakes to the axles on my trailer, but this is up to you. As the trailer and camper are designed it works well with 33-35" tires. If you are planning on using different size tires modifications will need to be made. When building the trailer frame, take into account the size of the water tank you will be using. Space the framing so that you can fit your tank in between the frame rails and so that the tank is either centered over the axle or slightly towards the rear. Also, be sure to weld in a channel to get all of your electrical and any other utilities desired from the front of the trailer to the rear. I used a receiver tube for the tongue of my trailer so that I could remove my lunette eye when needed.

Bolt the body of the camper to the trailer through the cross members, again using the grade, diameter and quantity that you feel comfortable with.

I added steps to my camper after it was built to make it easier for my wife and kids to get in and out, however, this is now the low hanging point of the trailer and I

have caught it on many rocks and holes. Take this into consideration if you are going to add one to your trailer.

Part 2 – Interior Finishes

Bracing the Pop Top

Before going any further it is important to brace the top. Although the lift arms are more than strong enough to lift and hold the weight of the roof, they do not resist shear forces. Using ½" Conduit and a conduit bender bend the conduit into the shape shown. The angle isn't important; just shoot for around 30° off 90°. The larger the angle is from 90°, the more resistant it will be to shear. Space it out so that the brace fits just inside the lift arms.

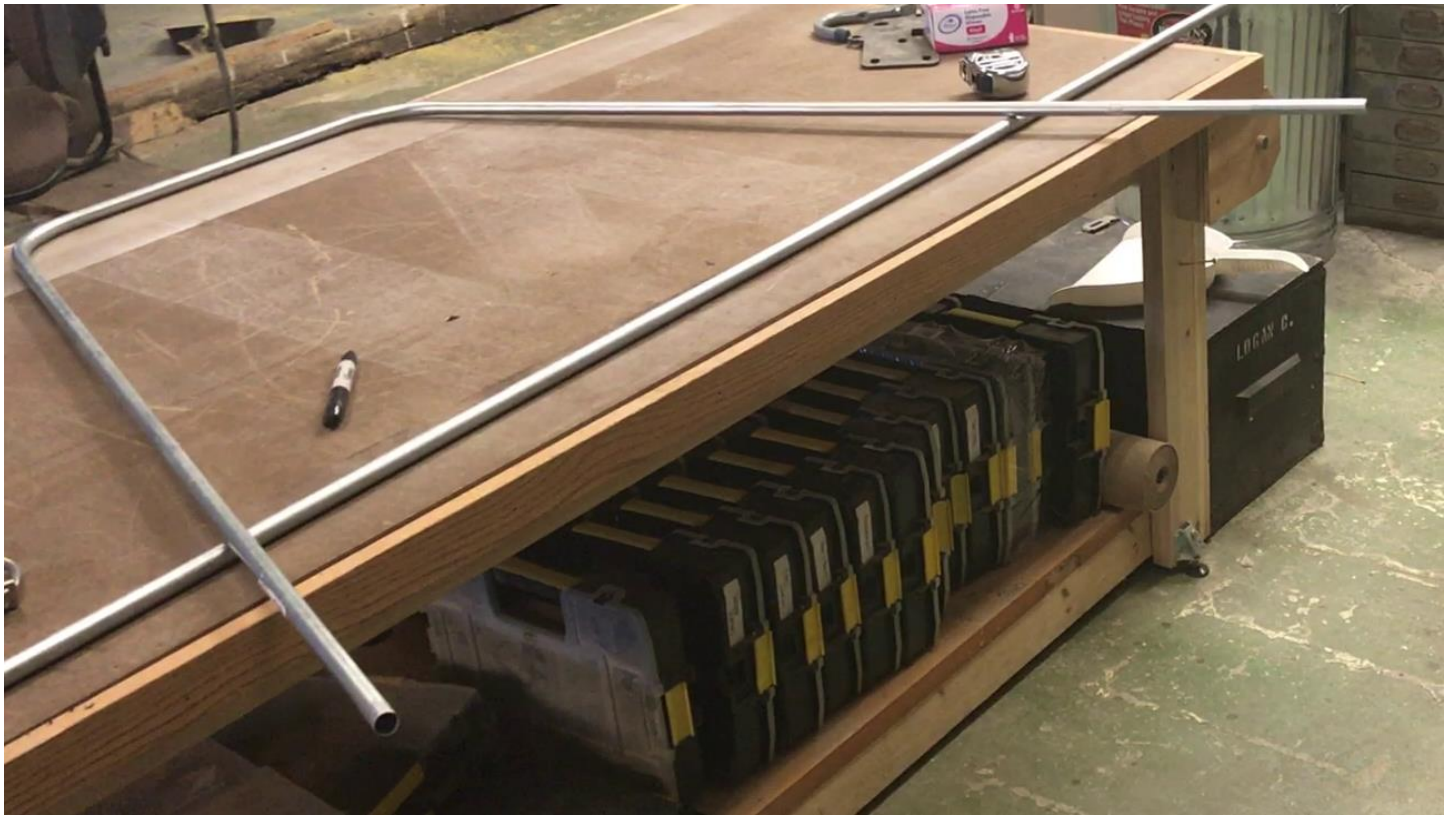

Make sure to leave plenty of length on the legs so that you can mount them and mark the length for your specific trailer, you will want the ends to extend approximately 4" past the top of the wall. You will need a minimum of 3 braces,

one on each side and one on the front. A rear one would be nice, but is hard to get to without climbing onto the bunk bed.

For the front brace, you will need to install a brace that will serve 3 purposes: to support the front sheet of plywood and keep it from bowing, to give a mounting point for the front lift arm support and to act as a mounting point for the optional front bunk bed.

Once you have the length marked, cut the ends of the conduit off. Using a bench vise, crimp the ends of the conduit flat. You will want them to be flat every where they are in contact with the wall. Once flattened round over the ends with a grinder and drill a 5/16” hole to allow for the threaded knobs to go through.’

Mount the conduit to the frame of the roof using Conduit straps, being sure to allow enough room for the ¼” plywood ceiling panel you will be adding in a later step. Once the conduit is mounted to the roof, you can then transfer your hole locations into the side walls. Be careful to not drill all the way through the side or

you will have to patch the fiberglass. Drill an appropriate diameter hole for the threaded inserts you are using. Add epoxy to the threaded insert so that it will have more holding power into the sides. Now you can quickly attach the lift arm supports with the threaded knobs when the top is raised.

Ceiling

For this step, it is easiest if you remove the roof. Box in the location that houses your lift arms when the top is in its lowered position using 1-1/2” lumber.

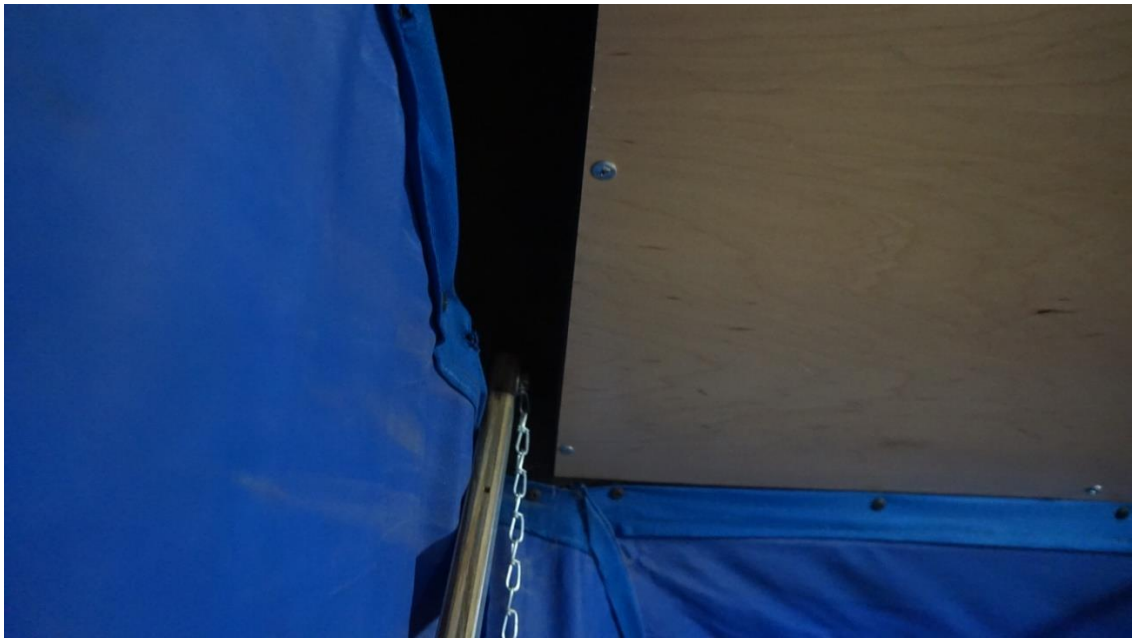

Using 1-1/2” foam, insulate all of the cavities in the camper except for where the lift arms go. Make sure to get this as tight as possible, because anytime you are camping without the top up, the majority of your heat loss will be through your roof. Once all of the insulation is in, you can begin to plan you wiring.

I have 2 lights and a powered fan in my ceiling you but you can modify this as needed. Make sure to cut slots in the framing and insulation for the wires to run in. Wire the fixtures per your manufacturer's instruction. I ran all of the wiring to the rear passenger side corner as that's where I placed my electronics. If you are planning on powering your trailer differently then modify accordingly.

Once your wiring is complete, cut ¼" pre-finished plywood to fit the ceiling, drilling holes for your light wiring and making cutouts for your vent and lift arm cavities. Secure the panels to the framing using 1" washer head screws. Take care to evenly space them so they will be pleasing to the eye.

Wire your lights per manufacturer's instructions and install the vent trim and lift handles. If you removed your lift arm supports during this step, re install them and install retainer clips to hold them up when the top is in the stored position.

Re-install the roof onto the Camper.

Walls

Once the roof is re-installed, it is time to prepare for finishing the walls. Add blocking around the lift arm supports. Also, if there are any interior corners of the

plywood that you did not put corner blocking in earlier, make sure to do that now. If you are planning on installing an awning on your camper, now would also be the time to install the mounting hardware so you don't have to take trim panels back off in the future. Also, if you are planning on installing a wall mounted heater, add any blocking required to install it per manufacturer's instructions now. After adding all the required blocking, cut ¾" foam to fit your openings. You will want to do this to two opposing sides, then once they are completely finished move on to the two perpendicular surfaces.

After the foam is added, you will need to cut a piece of 1/4” pre-finished plywood to fit the shape of the side. The lift arm and strut will need to be removed for this. Take care to sand all edges and if your windows do not have a trim piece round over all edges around them. Using 1” washer head screws, attach your panel into the corner bracing.

Once both sides are done, you will need to add ¾” blocking to each corner again so you will have something to screw the panels into. You will also need to add a ¾” x 2-1/2” strip across the bottom of the back to support the hinge for the couch / bed.

If you want to conceal the wiring for the galley, now would be the time to do it. The back wall for the cabin is a shared wall for the galley. I ran my wiring in loom in the galley for easier access in the future, but this is an option if you want to have it all concealed.

Once all blocking and wiring is finished insulate in the same way as before. Cut and fit the pre-finished plywood and attach with 1” washer head screws.If your door and windows came with interior trim, install that now.

For the floor, just as before cut and fit ¾” insulation. Once the insulation is installed install a vinyl floating floor. This will give you the water resistance and durability you will need while camping and requires no connection to the floor.

Once installed add prefinished molding to the corners if you feel necessary.

Optional Front Bunk

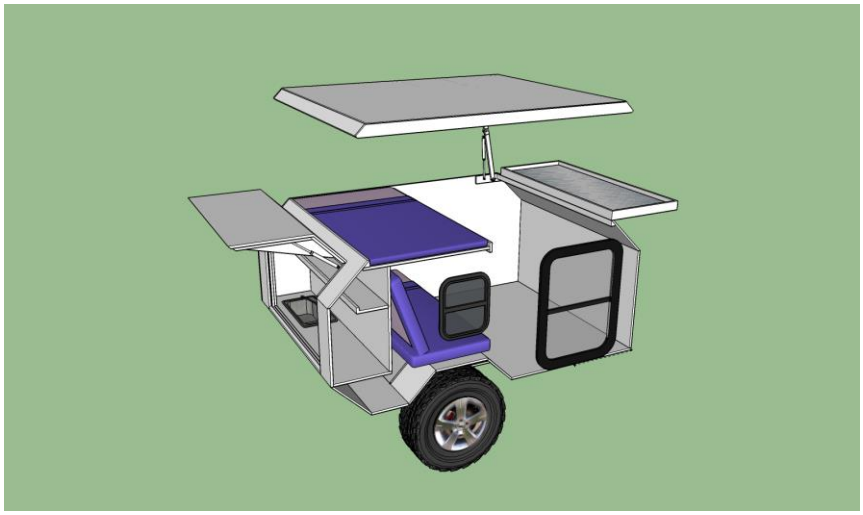

If you are planning on installing the optional front bunk bed, build it and install it now. The base is built from ¾” plywood and the sides are ¾” x 2-1/2” lumber. Mount the plywood ¾” up from the bottom of the sides to allow room for ¾” insulation. Add ¾”x 1” blocking to bottom perpendicular to the bed to act as a mounting point for the bunk supports. Add the insulation into the cavities and cover with ¼” un-finished plywood.

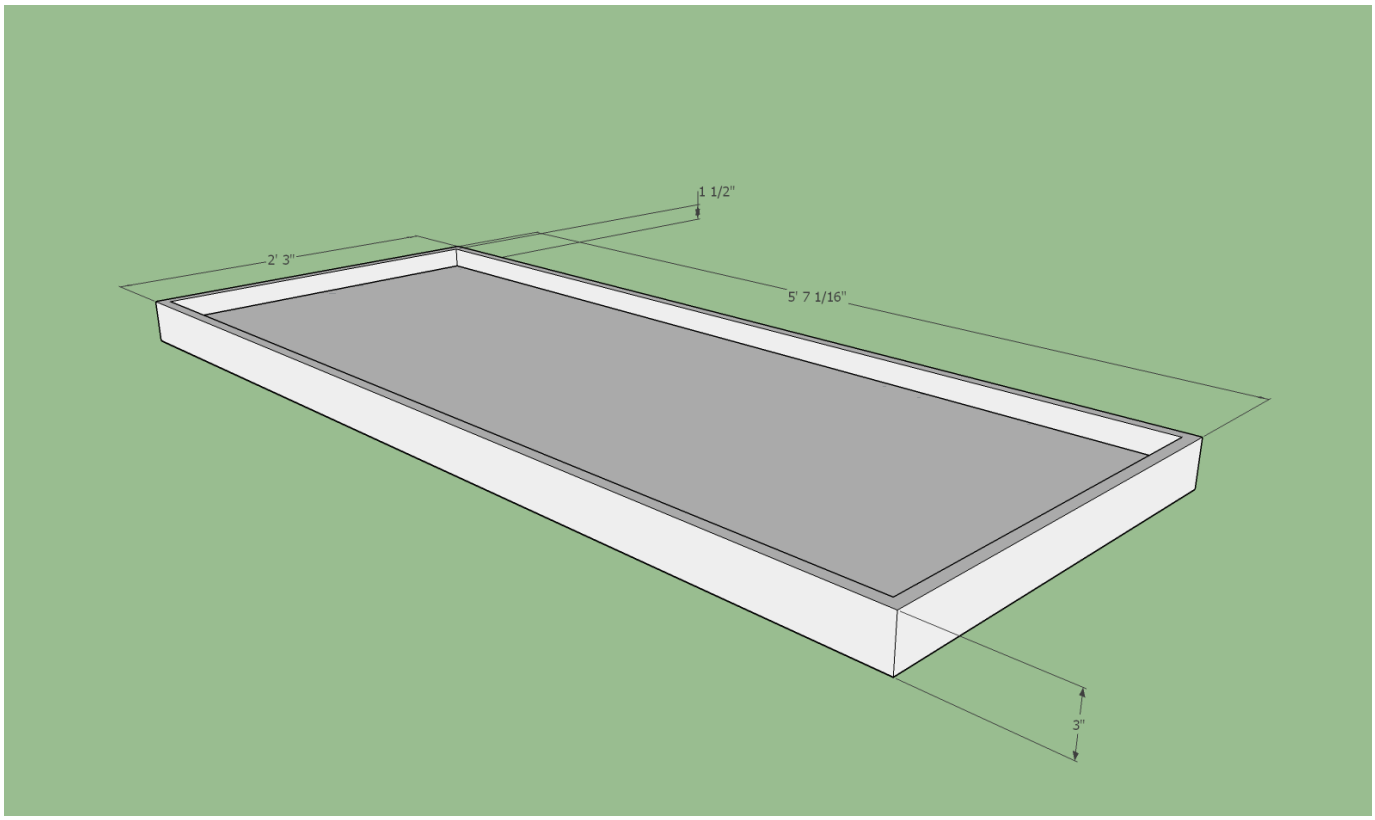

Mount the bed to the camper using a piano hinge. Once installed measure for the bunk supports and install them into the bunk supports blocking added in the previous step using piano hinges. Leave room to add furniture pads to the bottom of the supports so they do not scratch the fiberglass and paint. The bed should be parallel to the trailer frame when opened.

You will also need to make a support for the roof of the tent that will cover this bunk. It is made from 3/4” conduit again. Bend it with the sides as close to 90° as possible and to where they just fit between the trim. Mount them using ¼” bolts as a pivot point s that the conduit rest inside the bed when closed, but pivots up and back at a slight angle away from the bunk when opened.

Once you have finished making the canvas cover below, you will need to make a stretcher to keep the roof of the bunk taught. You can use a piece of 1x2 or a piece of conduit with appropriate connectors. This will ensure the pop out stays open and sheds water properly.

Couch / Bed Combo

The bed will be made from 3/4” x 1-1/2” slats that slide past one another to allow the couch to expand to the width of a queen mattress. Start by measuring the finished interior width of your trailer at the narrowest point. This will probably be between the window and door trim. Make your overall bed frame 2” shorter than this distance so you have no worry of interference later.

Cut each of the bed slats 32” long. This will result in space for a queen size mattress.

Use ¾” x 3-1/2” lumber to line the front and the rear of the couch. In the front this will add support and in the rear this will raise the pivot point of the frame so that it can still be lifted even with a mattress on it.

Mount ¾” x 3-1/2” runners on the insides of the fender wells approximately ¼” proud of the top of the fender for the bed to slide on when opening. This will reduce the friction as opposed to sliding on the fender wells. Mount the frame to the back wall using a piano hinge into the blocking you installed earlier. These will also act as side spacers for the drawers later also reducing friction.

Drawers

When measuring for your drawers, be mindful to leave enough room for you utilities and appliances in the galley. For instance, if you want to install a recessed stove that is plumbed directly to an LP tank you will need to leave enough room that you do not hit your piping or your stove. The same goes for a sink, domestic water plumbing, wiring and any other utility you may want to install in this space.

Once you have determined the max depth of your drawers from the front trim of the bed frame, subtract ¾”. For the height measure the distance from the finished floor to the bottom of the bed frame and subtract 1-1/2”. The extra room in length will allow for a drawer front and the room in the height will allow for a ½” pre-finished plywood bottom while still leaving an inch of clearance on the sides, this allows the drawers to slide effortlessly on the flooring. You can build one large drawer or two smaller drawers depending on your preference. If you build two narrow drawers, leave a 1-1/2” gap between them and attach a 1-1/2” runner to the floor to keep them parallel to one another. I used pocket hole construction to build my drawers but you can build them however you prefer.

When adding the drawer fronts make them 1/8” shorter than the opening between the finished floor and the bed front. Hold them up 1/16” from the floor when installing them to the drawer boxes. This will keep them from scraping the floor.

Cheap window latch hardware works perfect as a positive latch to keep the drawers attached to the bed frame. This will not only keep the drawers closed, but also keep them properly aligned when they are acting as the support for the extended bed. I also used latches to hold the drawers and bed in place while offroading. It's not necessary but sometimes when traveling on more aggressive trails, the bed would open itself.

Canvas

If you are not adding the optional front bunk bed this step is much easier, however if you are then it is going to require a lot higher level of skill with a sewing machine.

The first step is the same regardless of if you are doing the optional bunk or not, but at this point assume all directions are without the bunk.

Start by cutting a length of fabric long enough o go completely around the top of the camper with a foot or two to spare. You can always cut more off, but it is a little harder to add more back on. Hem one edge the entire length of the fabric, leaving enough room between the seam and the edge to install the snaps. Once this is complete, take the fabric to your camper.

Install a few snaps in the hem starting about 6” from the end, evenly space them approximately 6” O.C. Only do a few at a time as the spacing will have to be altered when you get to each corner as you want a snap installed on each surface near each corner. Screw one snap in at a time. If you are planning on adding the optional bunk then I would start from one of the front corners, if not, then it really doesn’t matter where you start, but I would start in a corner so it better hides the seam. For each additional snap, hold the fabric taught, not stretched, and install the next screw. Continue all the way around until the entire top is attached.

Next you will evenly space the female side of screw in button snaps into the side of the camper. Again, space them approximately 6” O.C. while making sure there are snaps at each corner. Mark the fabric for another hem so that it covers the snaps and has enough room to install the snaps in the hem. You will have to remove the canvas to hem the bottom. Once the canvas is re-installed, start by making sure the fabric is hanging straight and smooth. Install your first button snap and work your way around the camper being sure to hold the fabric taught, not stretched, to mark each additional snap.

If you have not chosen to build the optional bunk then all you have left is to pin the seam and sew the canvas together and re-attach. However, if you are building the bunk, you will need to template around the bunk to make a tent structure around the bunk that snaps to the frame of the bunk. The hardest part about this will be fitting all of the excess material through the throat of the sewing machine.

A quick note, the snaps on the side of the bunk will have to be opened and re-attached each time you open and close the top so do not use grommets and screws here.

Once the canvas is finished, you can close the top and add the turnbuckle latches to the top. Tucking the canvas in the top while closing it is more of an art than a

science and takes a few tries to get it just right. If needed, I can video how I do it, just let me know.

Utilities

*Propane and electricity can both be extremely dangerous; there is a risk of fire, explosion and Carbon Monoxide Poisoning. So if you are not 100% confident in your ability to install these correctly DO NOT ATTEMPT THEM. Either have a professional do it for you or forgo some of these options for commercially available products, i.e. using a portable camp stove instead of a permanent LP stove.

For this I will not tell you how to install these but refer you to your manufacturer's installation instructions.

A couple of tips to keep in mind:

- Make sure to mount your propane tank with the valve on top. You burn the vapor, not the liquid so it needs to be able to escape.
- Leave yourself a means of draining your plumbing for winterization
- Leave access to all joints, connections, shut offs, etc
- Solder all connections. Crimped joints will fail
- Install a switch for your water pump if you install one. If a water line comes loose while driving it will pump all of the water out of the tank unless you have a way to switch it off when not in use.
- Install shut offs for each appliance, so if you develop a leak at an appliance you can shut it off and continue to use the other appliances.

Galley

For the Galley, I installed a stove, Sink (no drain), a water heater and cabinets. This will be a description based on using the appliances and electrical setup similar to mine. Modify based on what you are using.

Line the bottom (countertop) with ¼” pre finished plywood. This can be left short on the right side because it will be covered by the electrical panel. Do the same with the back wall and ceiling. If you installed your wiring behind the wall in a previous step, make sure to pull them through the panels now. You can temporarily mount your water heater to get accurate measurements for your cabinets. Make sure to follow the manufacturer’s instructions, pay close attention to the required clearances.

Using these as guidelines determine the width and height of your cabinet making sure to leave enough room for the door on the right to open. Cut a solid piece of ½” pre-finished plywood for your face frame and doors. * You could always just build a shelf here instead of a cabinet*

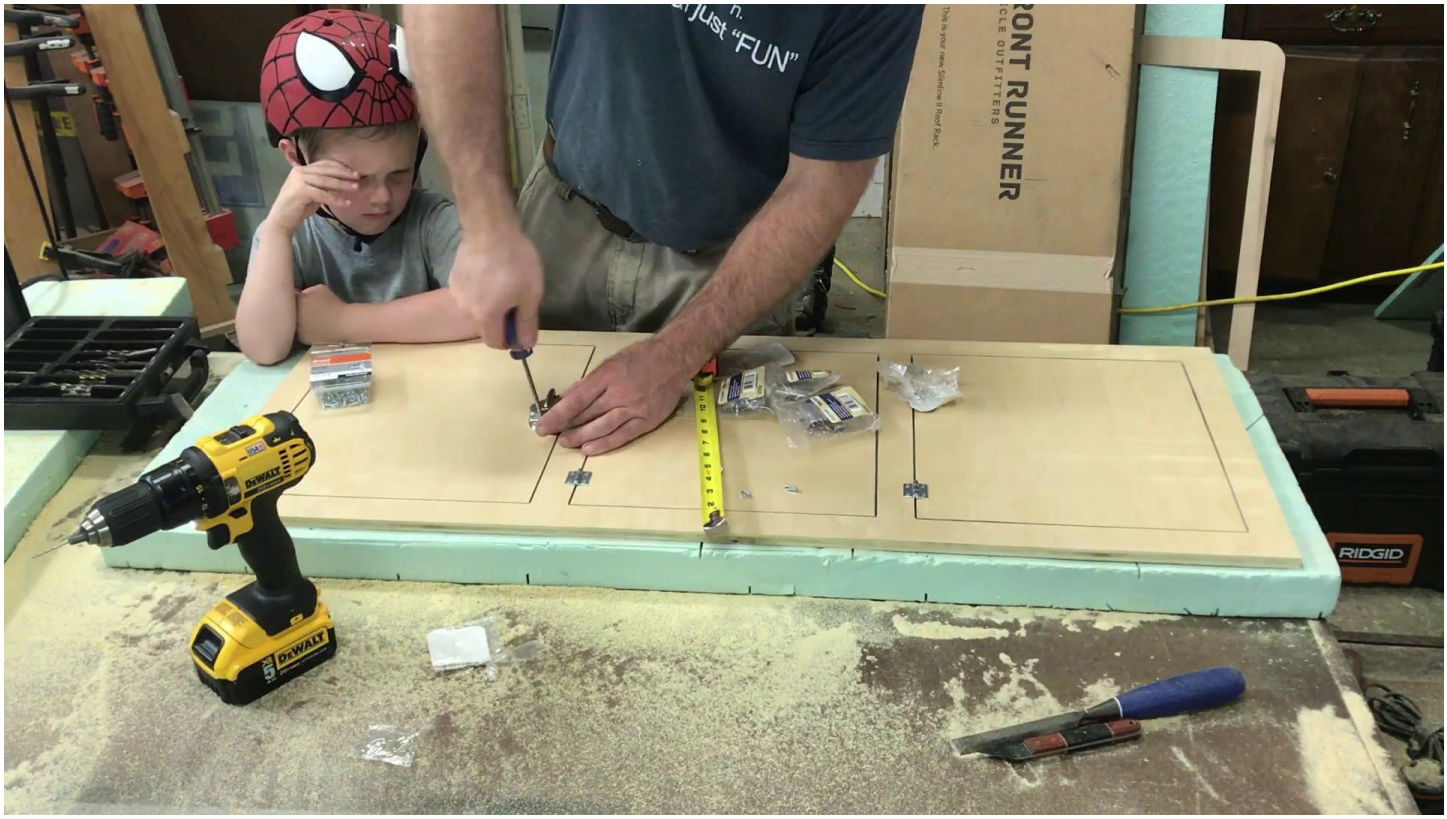

Mark your doors and cut them out, leaving them slightly attached at each corner. This will serve as spacers for your hinges and latches. Go ahead and install all of your hinges and latches. Once they are all attached, you can cut the doors free using a small pull saw. This cabinet only needs sides and a bottom as the prefinished panels on the wall and ceiling of the galley will act as a back and top, again use pre-finished plywood.

Drill pocket holes in the bottom and sides to be able to secure the cabinet to the wall. Make sure the pockets are on the inside of the sides and on the underside of the bottom. Attach the cabinet to the wall making sure that the right edge is set far enough to the right so a pane can be added to box in the electronics.

At this point you can cut the holes for any appliances you want to install and complete the installation of all utilities. I installed lights below the cabinets and in the underside of the galley door. Wire them per the manufacturer's instructions, and if you did not hide the wires in the wall in a previous step, you can run them in wire loom under the cabinet.

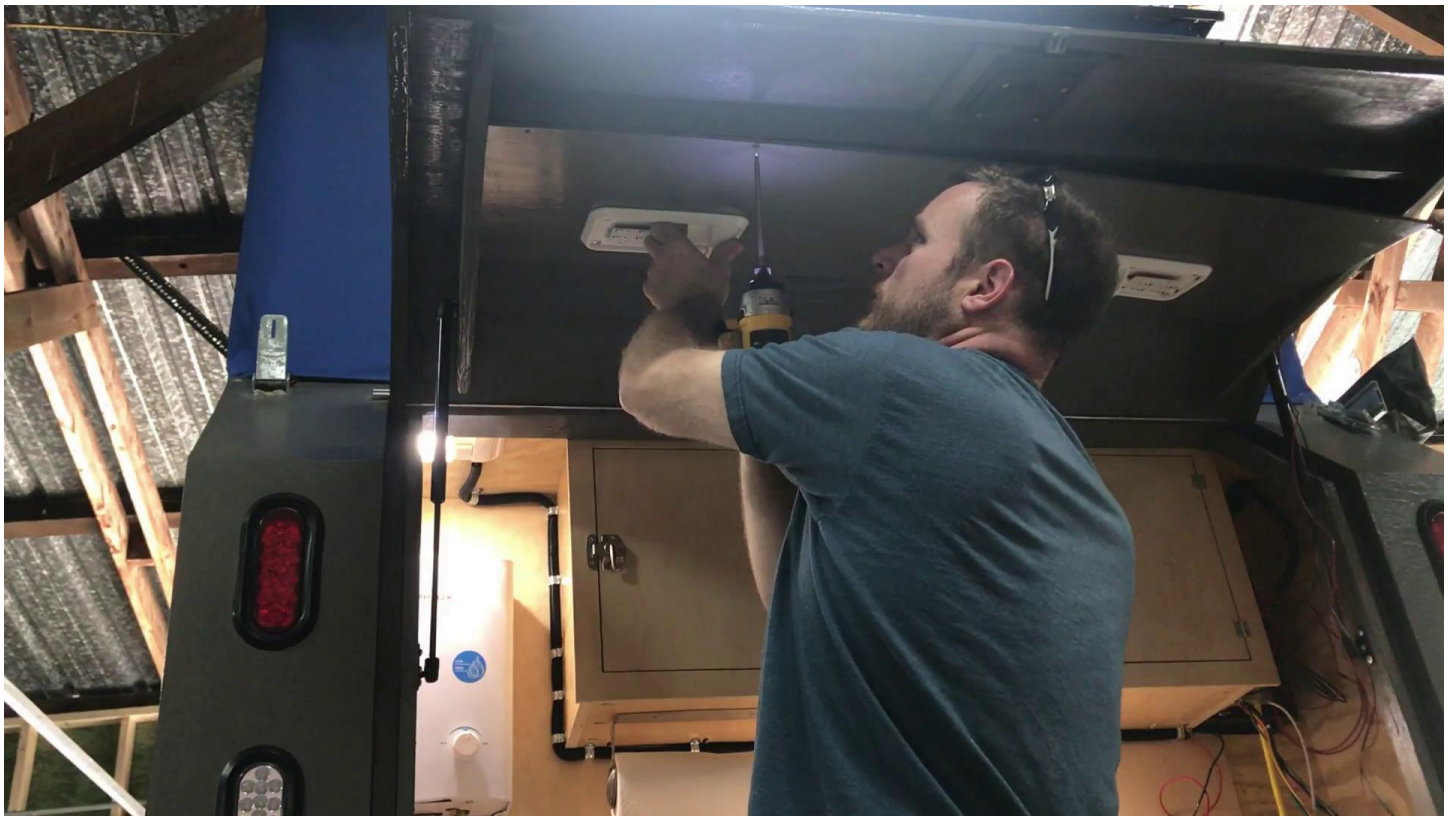

Final Touches

At this point, you will want to paint any unfinished surfaces, i.e. the underside of the optional bunk bed, the inside of the galley door. Anywhere that isn't painted or pre-finished. Add Diamond plate to the front of the camper for added protection using tar and 3/4" truss head screws

You also want to go over all utilities and make sure there are no, shorts, leaks, etc.

I used a queen size 8" memory foam mattress. Here are the dimensions I cut it but you will want to compare it to your actual measurements.

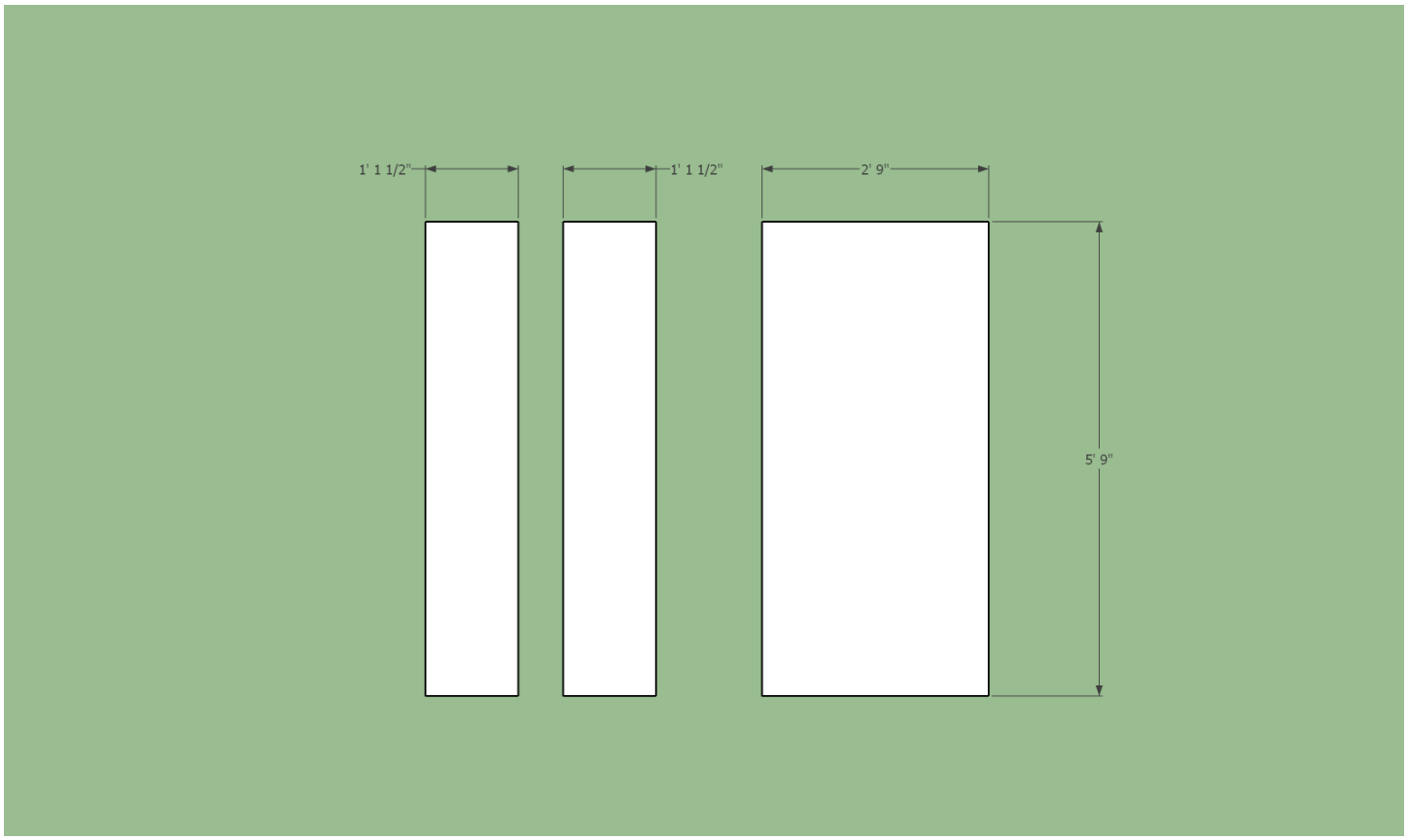

I also used over door shoe organizers to make some easy storage.

I hope you have enjoyed these plans and get many years of service from your Off-road Overland Trailer.

If you experience problems with the plans, please do not hesitate to send an email to Shawneehillsfarm@gmail.com

Regards

Shawnee Hills Workshop

`